Disiamylborane & Thexylborane Preparation Kits

revised 5/96

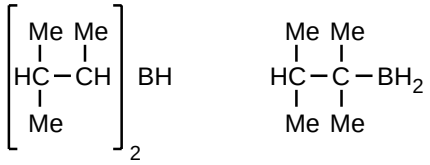

1
disiamylborane

2
thexylborane

Introduction

Disiamylborane[1, 2] (**1**) and thexylborane[3,4] (**2**) are useful borane reagents which are not stable on prolonged storage and therefore must be freshly prepared. For your convenience, Aldrich offers special kits for making these compounds.

Description

The reagents in these kits have been prepared under anhydrous conditions and packaged under nitrogen in Sure/Seal™ bottles.

A. Disiamylborane Preparation Kit- Catalog No. 22,078-7

This kit contains 100mL of 1M borane-tetrahydrofuran complex (BH_3•THF) and 100mL of 2M 2-methyl-2-butene in THF for the preparation of ~200mL of 0.5M disiamylborane (~0.1mole) in THF.

B. Thexylborane Preparation Kit- Catalog No. 22,079-5

This kit contains 100mL of 1M BH_3•THF and 100mL of 1M 2,3-dimethyl-2-butene in THF for the preparation of ~200mL of 0.5M thexylborane (~0.1 mole) in THF.

Experimental Procedures

Note: As with all reactions, proper safety precautions are to be taken in performing the following reactions.

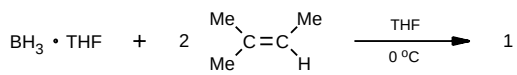

A. Preparation of 0.1 mole of 0.5M solution of disiamylborane in THF

A 250-mL three-necked flask, equipped with a magnetic stirring bar, themometer well, addition funnel, and condenser vented to a mineral oil bubbler is oven dried and assembled while still hot and being flushed with a stream of dry nitrogen. After cooling to 0°C under slight nitrogen pressure, the reaction flask is charged with 100mL of 1M BH_3•THF solution[5], and 100mL of 2M 2-methyl-2-butene in THF is transferred to the addition funnel. The olefin-THF is then added dropwise to the BH_3•THF reagent while a temperature range of -10° to 0°C is maintained with an ice salt bath. The disiamylborane solution is stirred at 0°C for an additional 2 hours after which the reagent is ready for use.[6]

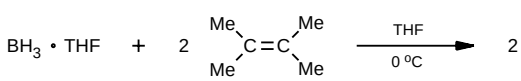

B. Preparation of 0.1mole of 0.5M solution of thexylborane in THF

The procedure is the same as that described above for the preparation of disiamylborane, except that 100mL of 1M 2,3-dimethyl-2-butene is used (instead of a 2-methyl-2-butene solution) and the reagent solution is stirred for an additional 1 hour (instead of 2 hours).

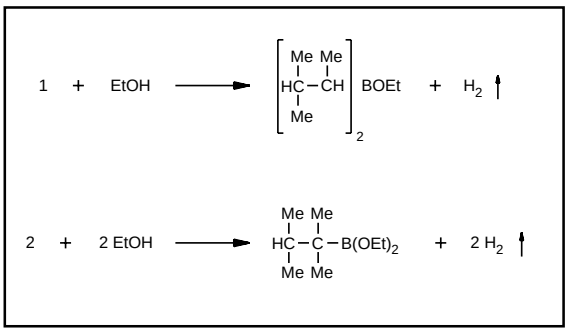

Analysis of the Disiamylborane and Thexylborane solutions

The precise concentration may be determined by measuring the volume of hydrogen evolved (using a gas buret) when an aliquot is injected into ethanol. Details of the analysis are discussed in Technical Information Bulletin AL-123, *Quantitative Analysis of Active Metals and Metal Hydrides via Gas Buret.* Disiamylborane and thexylborane undergo complete hydrolysis *(see diagram at left).*

Stability, Storage, and Handling

The solutions of disiamylborane and thexylborane in THF are stable at 0°C for one week when stored and handled under anhydrous conditions. Long-term storage of the reagents presents no hazard and the total hydride concentration remains essentially constant. However, the bulky thexyl group undergoes slow isomerization and the disiamyl reagent undergoes slow disproportionation to give borane reagents with decreased selectivity. Consequently, it is strongly recommended that the reagents be stored at 0°C and used within one week of preparation.

Old solutions can be deactivated by cautiously destroying the hydride activity with ethanol. The resulting mixture should be disposed of according to local, state, and federal regulations.

References

1. Zweifel, G.; Brown, H.C. *Org. React.* **1963**, *13*, 1.
2. For investigation of the kinetics of hydroboration of representative alkenes with disiamylborane see: Brown, H.C.; Chandrasekharam, J.; *J. Org. Chem.* **1985**, 50, 518.
3. Brown, H.C.; Negishi, E. *J. Am. Chem.* **1972**, *94*, 3567.
4. For hydroboration of olefins with thexylborane see: Brown, H.C.; *J. Am. Chem. Soc.* **1975**, 97, 2791.
5. For a complete description of recommended techniques for handling these solutions, please consult Technical Information Bulletin AL-134, *Handling Air-Sensitive Reagents.*
6. For a general review of organoborane chemistry, see Brown, H.C. *Boranes in Organic Chemistry*; Cornell University Press: Ithica, 1972.

Other hydroborating agents available from Aldrich:

9-BBN dimer	Cat. no. 17,871-3
Catecholborane	Cat. no. 18,891-3
Dimesitylborane	Cat. no. 31,034-4

Aldrich Chemical Company, Inc.

1001 West Saint Paul Ave., Milwaukee, WI 53233

Telephone 414-273-3850 Fax 414-273-4979 Internet aldrich@sial.com

800-231-8327 800-962-9591 TWX 910-262-3052